Joseph House Tuition

Centre	Joseph House Tuition
Candidate name	
Date	

GCSE

PHYSICS

Higher Tier Paper 1H Mock examination

Time allowed: 1 hour 45 minutes

Materials

For this paper you must have:

- a ruler
- a scientific calculator
- the Physics Equations Sheet (at the back of this paper).

Instructions

- Use black ink or black ball-point pen.
- Pencil should only be used for drawing.
- Answer **all** questions in the spaces provided.
- Do all rough work in this book. Cross through any work you do not want to be marked.
- In all calculations, show clearly how you work out your answer.

Information

- The maximum mark for this paper is 100.
- The marks for questions are shown in brackets.
- You are expected to use a calculator where appropriate.
- You are reminded of the need for good English and clear presentation in your answers.

Marking your work

A full mark scheme is included at the back of this paper. Complete the paper under timed conditions before using it.

For marking	
Question	**Mark**
1	
2	
3	
4	
5	
6	
7	
8	
9	
10	
11	
TOTAL	**/ 100**

This is an independent mock examination written by Joseph House Tuition in the style of AQA GCSE Physics (8463) Paper 1, covering Topics 1 to 4: Energy; Electricity; Particle model of matter; Atomic structure. It is not an official AQA paper.

This question is about energy resources.

0 1 . 1 Which energy resource is **non-renewable**?

Tick (✓) **one** box.

Coal	☐
Solar	☐
Tides	☐
Wind	☐

[1 mark]

0 1 . 2 Give **one** advantage and **one** disadvantage of using solar cells to generate electricity.

Advantage

.....

.....

Disadvantage

.....

.....

[2 marks]

0 1 . 3 A country plans to close its coal-fired power stations.

One option is to replace them with a large number of wind turbines.

Another option is to replace them with a nuclear power station.

Evaluate the two options.

.....

.....

.....

.....

.....

.....

.....

.....

.....

[4 marks]

A crane lifts a load of mass 600 kg vertically through a height of 15 m.
The crane takes 20 s to lift the load.
gravitational field strength = 9.8 N/kg

0 2 . 1 Calculate the gravitational potential energy gained by the load.

.....

.....

.....

Answer ..... J

[2 marks]

0 2 . 2 Calculate the useful power output of the crane.

.....

.....

.....

Answer ..... W

[2 marks]

0 2 . 3 The total power input to the crane's motor is 6.3 kW.
Calculate the efficiency of the crane.

.....

.....

.....

Answer .....

[2 marks]

0 2 . 4 A ball of mass 0.50 kg is dropped from a height of 3.2 m.

Calculate the speed of the ball just before it hits the ground.

Assume that air resistance is negligible.

.....

.....

.....

.....

.....

.....

Answer ..... m/s

[4 marks]

A student investigated the specific heat capacity of aluminium.
Figure 1 shows the equipment used.

Figure 1

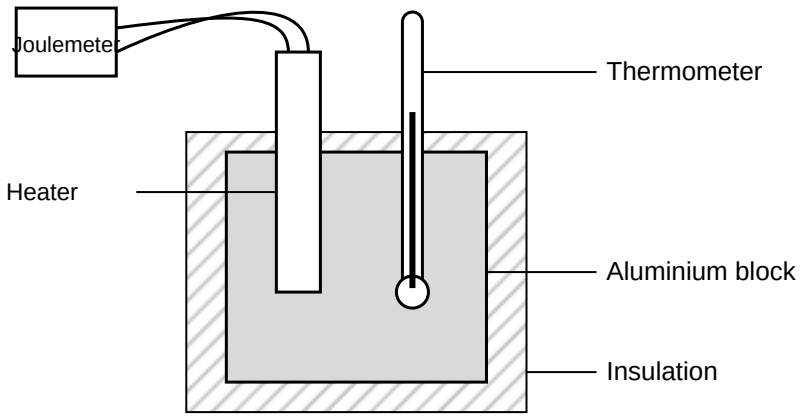

0 3 . 1 Describe a method the student could use to determine the specific heat capacity of aluminium.

[6 marks]

0 3 . 2 The mass of the aluminium block was 1.0 kg.

The heater had a power of 50 W and was switched on for 10 minutes.

The temperature of the block increased from 20.0 °C to 52.0 °C.

Calculate the specific heat capacity of aluminium.

Use the Physics Equations Sheet.

.....

.....

.....

.....

.....

.....

.....

Answer ..... J/kg °C

[4 marks]

0 3 . 3 The value calculated by the student was higher than the true value for aluminium.

Explain why.

.....

.....

.....

.....

[2 marks]

0 3 . 4 Suggest **one** way the student could improve the investigation to make the value closer to the true value.

.....

.....

[1 mark]

Figure 2 shows a circuit.

Figure 2

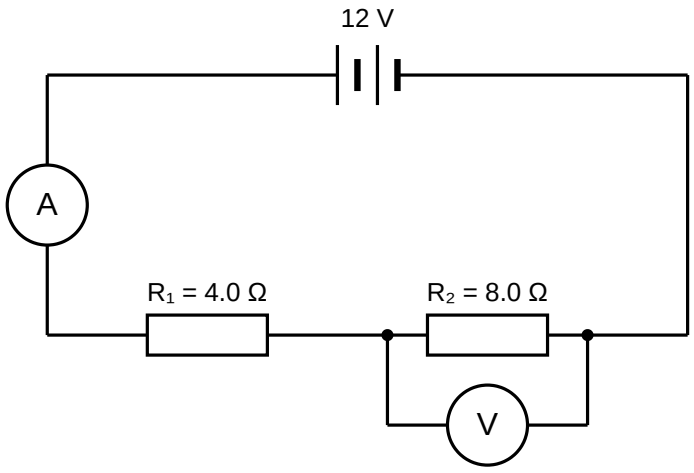

0 4 . 1 Calculate the total resistance of the circuit.

.....

.....

Answer ..... Ω

[1 mark]

0 4 . 2 Calculate the current in the circuit.

.....

.....

.....

Answer ..... A

[2 marks]

0 4 . 3 Calculate the reading on the voltmeter.

.....

.....

.....

Answer V

[2 marks]

0 4 . 4 Calculate the charge that flows through resistor R_1 in 2 minutes.

.....

.....

.....

Answer C

[2 marks]

0 4 . 5 Resistor R_2 is replaced with a thermistor.

The temperature of the thermistor increases.

Explain what happens to the reading on the voltmeter.

.....

.....

.....

.....

.....

.....

[3 marks]

This question is about mains electricity.

0 5 . 1 Complete the sentence.

In the UK, the mains electricity supply has a frequency of _____ Hz and a potential difference of about _____ V.

[2 marks]

0 5 . 2 The National Grid uses step-up transformers at power stations.

Explain how this makes the National Grid an efficient way to transfer energy.

.....

.....

.....

.....

.....

.....

[3 marks]

0 5 . 3 A kettle has a power rating of 2.3 kW. It is connected to the 230 V mains supply.

Calculate the current in the kettle.

.....

.....

.....

.....

Answer ..... A

[3 marks]

A student rubs a polythene rod with a cloth.
The polythene rod becomes negatively charged.

0 6 . 1 Explain how the polythene rod becomes negatively charged.

.....

.....

.....

.....

[2 marks]

0 6 . 2 Figure 3 shows a small negatively charged sphere.

Draw the electric field pattern around the sphere.

Figure 3

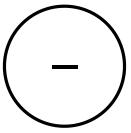

[2 marks]

0 6 . 3 The student holds the charged rod close to an earthed metal tap. A spark jumps between the rod and the tap.

Explain why.

.....

.....

.....

.....

[2 marks]

This question is about the particle model of matter.

0 7 . 1 A student measured the density of an irregularly shaped stone.

The mass of the stone was 156 g.

When the stone was placed in a displacement can, 60 cm^3 of water was displaced.

Calculate the density of the stone in kg/m^3.

.....

.....

.....

.....

.....

Answer ..... kg/m^3

[3 marks]

0 7 . 2 A sealed syringe contains air.

Explain, in terms of particles, how the air exerts a pressure on the walls of the syringe.

.....

.....

.....

.....

.....

.....

[3 marks]

0 7 . 3 The air in the syringe has a volume of 30 cm^3 and a pressure of 100 kPa.

The plunger is pushed in slowly until the volume of the air is 20 cm^3.

The temperature of the air does not change.

Calculate the new pressure of the air.

Use the Physics Equations Sheet.

.....

.....

.....

.....

.....

Answer ..... kPa

[3 marks]

0 7 . 4 When a bicycle pump is used quickly, the air inside the pump becomes warmer.

Explain why.

.....

.....

.....

.....

[2 marks]

A student heated some ice in a beaker using an electric heater.
Figure 4 shows how the temperature of the contents of the beaker changed with time.

Figure 4

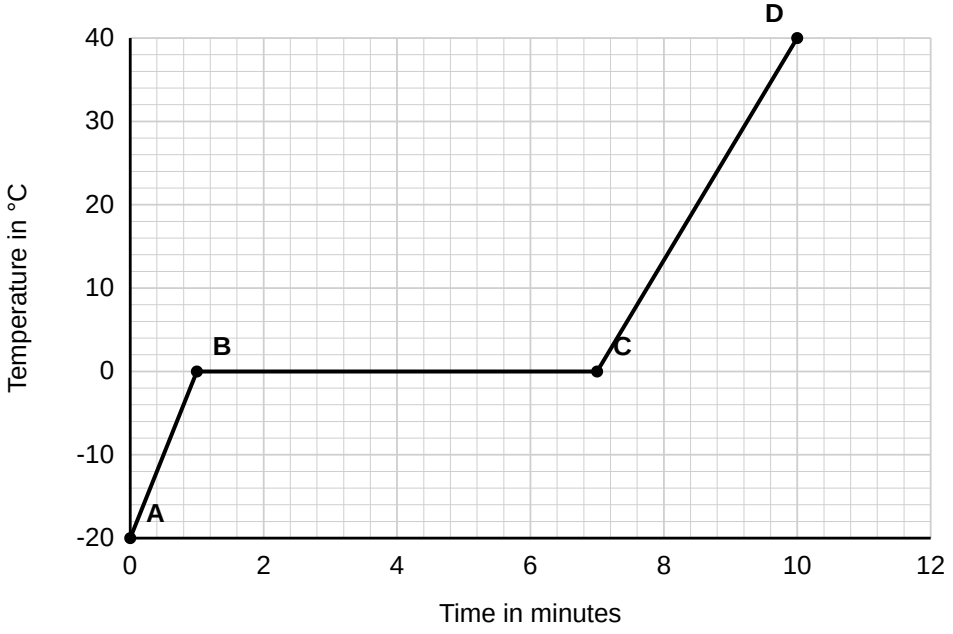

0 8 . 1 Which section of the graph shows the ice melting?

Tick (✓) **one** box.

A to B	☐
B to C	☐
C to D	☐

[1 mark]

0 8 . 2 Energy is transferred to the ice between B and C, but the temperature does not change.

Explain why.

.....

.....

.....

.....

[2 marks]

0 8 . 3 The mass of the ice was 0.25 kg.

specific latent heat of fusion of ice = 334 000 J/kg

Calculate the energy needed to melt all of the ice.

Use the Physics Equations Sheet.

.....

.....

.....

Answer ..... J

[2 marks]

0 8 . 4 Use Figure 4 and your answer to Question 08.3 to calculate the power of the heater.

Assume that all of the energy from the heater is transferred to the ice.

.....

.....

.....

.....

.....

Answer ..... W

[3 marks]

This question is about atomic structure.
Carbon-12 and carbon-14 are isotopes of carbon.

0 9 . 1 What is meant by the term **isotopes**?

.....

.....

.....

[2 marks]

0 9 . 2 A carbon-14 nucleus contains 6 protons.

How many neutrons does it contain?

Answer .....

[1 mark]

0 9 . 3 Carbon-14 decays by beta emission to form nitrogen.

Complete the nuclear equation by writing a number in each box.

$$^{14}_{6}C \rightarrow \,^{14}_{\square}N + \,^{\square}_{-1}e$$

[2 marks]

0 9 . 4 Scientists once believed the atom could be described by the plum pudding model.

The results of the alpha particle scattering experiment led to the plum pudding model being replaced by the nuclear model.

Describe the alpha particle scattering experiment and explain how its results led to the nuclear model of the atom.

[6 marks]

A sample of a radioactive isotope emits gamma radiation.
Figure 5 shows how the activity of the sample changes with time.

Figure 5

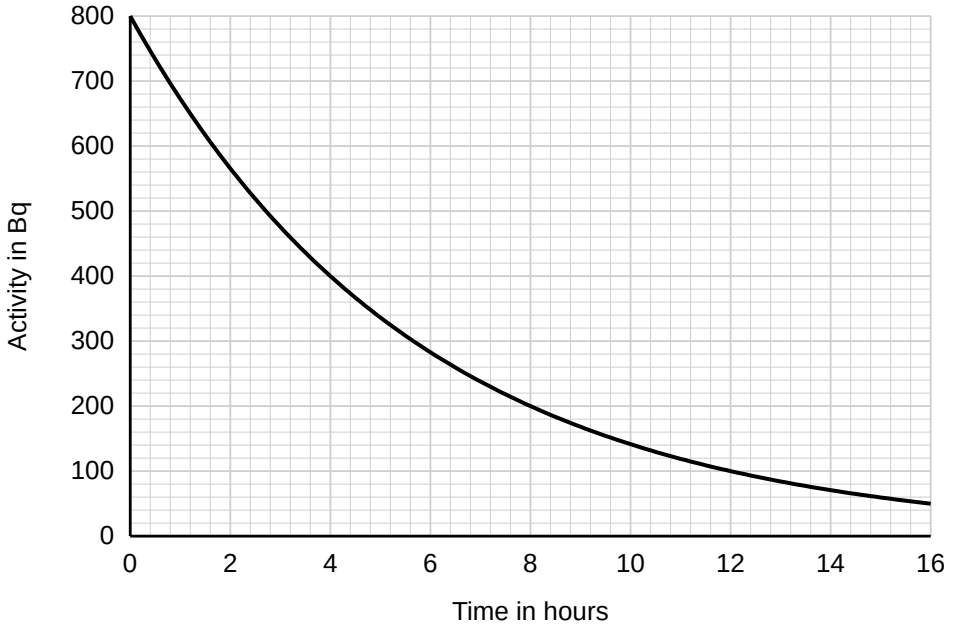

1 0 . 1 Determine the half-life of the isotope.

Show on Figure 5 how you work out your answer.

Answer ..... hours

[2 marks]

1 0 . 2 Calculate the activity of the sample after 24 hours.

.....

.....

.....

Answer ..... Bq

[2 marks]

1 0 . 3 The isotope can be injected into a patient as a medical tracer. A detector outside the body is used to monitor where the isotope travels.

Explain why this isotope is suitable for use as a medical tracer.

.....

.....

.....

.....

.....

.....

[3 marks]

1 0 . 4 A nurse handling the isotope wears gloves to avoid contamination.

Explain the difference between **contamination** and **irradiation**.

.....

.....

.....

.....

[2 marks]

Nuclear reactors use nuclear fission to generate electricity.

1 1 . 1 Describe how a chain reaction happens in a nuclear reactor that uses uranium-235.

.....

.....

.....

.....

.....

.....

.....

.....

[4 marks]

1 1 . 2 What is the purpose of the control rods in a nuclear reactor?

.....

.....

[1 mark]

1 1 . 3 Scientists are developing reactors that use nuclear fusion.

Describe what happens during nuclear fusion.

.....

.....

.....

.....

[2 marks]

END OF QUESTIONS

Physics Equations Sheet

Equations you must be able to recall are not listed. This sheet shows the equations that are given in the examination for the topics on Paper 1.

1	elastic potential energy = 0.5 × spring constant × (extension)^2	$E_e = ½ k e^2$
2	change in thermal energy = mass × specific heat capacity × temperature change	$\Delta E = m c \Delta\theta$
3	thermal energy for a change of state = mass × specific latent heat	$E = m L$
4	potential difference across primary coil × current in primary coil = potential difference across secondary coil × current in secondary coil	$V_p I_p = V_s I_s$
5	for gases: pressure × volume = constant	$p V$ = constant

Mark scheme

GCSE Physics · Higher Tier Paper 1H mock

Joseph House Tuition

How to use this mark scheme

- Mark in a different coloured pen to the one you wrote your answers in.
- For calculations, a correct final answer scores full marks even if no working is shown. If the final answer is wrong, award marks for each correct step of working.
- **ecf** (error carried forward): if you got an earlier part wrong, you can still get full marks for a later part that correctly uses your earlier answer.
- **allow** means the answer is also acceptable. **ignore** means the words do not gain or lose marks. **do not accept** means the answer scores no marks.
- For the 6-mark questions, read the level descriptors, decide which level fits your answer best, then award the higher mark in that level if your answer is at the top of it.

Question	Answers	Extra information	Mark	AO
01.1	coal		1	AO1
01.2	**advantage**, any one from: • renewable / will not run out • no carbon dioxide (greenhouse gases) released when generating • low running costs • can be used in remote locations **disadvantage**, any one from: • does not generate at night • output depends on weather / cloud cover • low power output per unit area / needs a large area • high initial cost	allow no fuel costs ignore 'cheap' or 'environmentally friendly' unqualified	1 1	AO1
01.3	**Wind turbines**, any from: • renewable • no carbon dioxide released while generating • unreliable: output depends on wind speed • large number of turbines / large area needed • visual pollution / noise **Nuclear**, any from: • reliable / generates continuously • large power output from one site • no carbon dioxide released while generating • produces radioactive waste that must be stored for a long time • risk of a major accident • high cost of building and decommissioning **Conclusion** giving a reasoned choice.	1 mark for each relevant point, maximum 3 marks if only one option is discussed to gain 4 marks a conclusion consistent with the reasoning must be given	4	AO3
02.1	$E_p = 600 \times 9.8 \times 15$ $E_p = 88\ 200$ (J)	an answer of 88 200 (J) scores 2 marks	1 1	AO2

Question	Answers	Extra information	Mark	AO
02.2	P = 88 200 / 20 P = 4410 (W)	allow ecf from 02.1 an answer of 4410 (W) scores 2 marks	1 1	AO2
02.3	efficiency = 4410 / 6300 efficiency = 0.70	allow ecf from 02.2 allow 70%	1 1	AO2
02.4	E_p = 0.50 × 9.8 × 3.2 = 15.68 (J) E_k = E_p (all GPE transferred to KE) 15.68 = 0.5 × 0.50 × v^2 v = 7.9 (m/s)	allow v^2 = 62.72 allow 7.92 (m/s) an answer of 7.9 (m/s) scores 4 marks	1 1 1 1	AO2
03.1	**Level of response question.** Indicative content: • measure the mass of the aluminium block using a balance • place the heater and thermometer in the holes in the block • add a few drops of water or oil to the thermometer hole to improve thermal contact • wrap the block in insulation • record the starting temperature • connect the heater to a joulemeter (or ammeter, voltmeter and stopwatch) and switch on • heat for a measured time, e.g. 10 minutes • record the energy transferred (or calculate E = V × I × t, or E = P × t) • record the highest temperature reached and calculate the temperature change • calculate c = ΔE / (m Δθ) • repeat and calculate a mean		6	AO1

Level	Descriptor	Marks
Level 3	A coherent method is described with relevant detail, which demonstrates a broad understanding of the relevant scientific techniques and procedures. The steps are in a logical order. The method would lead to the production of valid results.	5–6
Level 2	The bulk of a method is described with mostly relevant detail. The method may not be in a completely logical sequence and may be missing some detail.	3–4
Level 1	Simple statements are made. The response may lack a logical structure and would not lead to the production of valid results.	1–2
	No relevant content.	0

03.2	E = 50 × 600 = 30 000 (J) Δθ = 52.0 − 20.0 = 32.0 (°C) 30 000 = 1.0 × c × 32.0 c = 940 (J/kg °C)	allow 937.5 or 938 an answer of 940 (J/kg °C) scores 4 marks an answer of 15.6 (J/kg °C) (time not converted to seconds) scores 2 marks	1 1 1 1	AO2

Question	Answers	Extra information	Mark	AO
03.3	energy is transferred (lost) to the surroundings so the temperature rise of the block is smaller than it would be (so the calculated value of c is too large)	allow 'heat lost' allow not all the energy supplied heats the block	1 1	AO3
03.4	any one from: • use more / thicker insulation • put a lid / insulating cover on top of the block • add oil / water to the thermometer hole		1	AO3
04.1	12 (Ω)		1	AO2
04.2	12 = I × 12 I = 1.0 (A)	allow ecf from 04.1	1 1	AO2
04.3	V = 1.0 × 8.0 V = 8.0 (V)	allow ecf from 04.2	1 1	AO2
04.4	Q = 1.0 × 120 Q = 120 (C)	allow ecf from 04.2 an answer of 2.0 (C) (time not converted) scores 1 mark	1 1	AO2
04.5	(resistance of the) thermistor decreases so the thermistor takes a smaller share of the (12 V) potential difference so the voltmeter reading decreases	allow total resistance decreases and current increases for the second mark the third mark depends on scoring the first mark	1 1 1	AO2
05.1	50 (Hz) 230 (V)		1 1	AO1
05.2	step-up transformers increase the potential difference (of the transmission cables) so the current is reduced (for the same power transferred) so less energy is transferred (lost) to the surroundings by heating the cables	allow 'voltage' for potential difference allow less power lost as heat	1 1 1	AO1
05.3	2.3 kW = 2300 W 2300 = 230 × I I = 10 (A)	an answer of 10 (A) scores 3 marks an answer of 0.01 (A) scores 1 mark	1 1 1	AO2
06.1	electrons are transferred from the cloth to the rod	do not accept protons / positive charges transferred for 2 marks the direction must be correct	1 1	AO1
06.2	radial lines drawn from the surface of the sphere arrows pointing towards the sphere	at least 4 lines, roughly evenly spaced the second mark depends on scoring the first	1 1	AO1
06.3	the potential difference between the rod and the tap is large / the electric field is strong so the air is ionised and charge (electrons) flows through the air to earth		1 1	AO1

Question	Answers	Extra information	Mark	AO
07.1	density = 156 / 60 = 2.6 (g/cm³) converting units: × 1000 density = 2600 (kg/m³)	an answer of 2600 (kg/m³) scores 3 marks an answer of 2.6 scores 2 marks	1 1 1	AO2
07.2	the particles move randomly (at high speed) the particles collide with the walls of the syringe each collision exerts a force on the wall, and pressure is the total force per unit area	ignore particles vibrating	1 1 1	AO1
07.3	100 × 30 = p × 20 p = 3000 / 20 p = 150 (kPa)	an answer of 150 (kPa) scores 3 marks	1 1 1	AO2
07.4	work is done on the gas (by pushing the piston) which increases the internal energy / kinetic energy of the particles, so the temperature increases		1 1	AO1
08.1	B to C		1	AO2
08.2	the energy is used to break the bonds (forces of attraction) between the particles so the kinetic energy of the particles does not increase	allow the energy increases the potential energy of the particles / internal energy allow energy is used to change state	1 1	AO1
08.3	E = 0.25 × 334 000 E = 83 500 (J)	an answer of 83 500 (J) scores 2 marks	1 1	AO2
08.4	time from graph = 6 minutes = 360 s P = 83 500 / 360 P = 230 (W)	allow ecf from 08.3 allow 232 (W) an answer of 13 900 (W) (time not converted) scores 2 marks	1 1 1	AO3
09.1	atoms (of the same element) with the same number of protons but a different number of neutrons	allow same atomic number, different mass number	1 1	AO1
09.2	8		1	AO2
09.3	7 (atomic number of nitrogen) 0 (mass number of the electron)		1 1	AO2

<table>
<tr><th>Question</th><th>Answers</th><th>Extra information</th><th>Mark</th><th>AO</th></tr>
<tr><td>09.4</td><td>Level of response question. Indicative content:
• plum pudding model: the atom is a ball of positive charge with negative electrons embedded in it
• alpha particles (positive) were fired at a very thin gold foil
• most alpha particles passed straight through, so most of the atom is empty space
• some alpha particles were deflected, so the centre of the atom is positively charged
• a very small number bounced back, so the mass is concentrated in a tiny nucleus
• the plum pudding model predicted that the alpha particles would all pass through with little or no deflection
• the results could not be explained by the plum pudding model, so it was replaced by the nuclear model
<table>
<tr><th>Level</th><th>Descriptor</th><th>Marks</th></tr>
<tr><td>Level 3</td><td>A detailed and coherent description of the experiment, with a clear explanation linking each observation to a feature of the nuclear model. The response is logically structured.</td><td>5–6</td></tr>
<tr><td>Level 2</td><td>A description of the experiment with at least one observation linked to a correct conclusion about the structure of the atom. Some detail may be missing.</td><td>3–4</td></tr>
<tr><td>Level 1</td><td>Simple statements about the experiment or the models of the atom, with little or no link between observations and conclusions.</td><td>1–2</td></tr>
<tr><td></td><td>No relevant content.</td><td>0</td></tr>
</table></td><td></td><td>6</td><td>AO1</td></tr>
<tr><td>10.1</td><td>4 (hours)
construction lines shown on Figure 5, e.g. from 800 Bq to 400 Bq</td><td></td><td>1
1</td><td>AO2</td></tr>
<tr><td>10.2</td><td>24 hours = 6 half-lives
$800 \div 2^6 = 12.5$ (Bq)</td><td>allow ecf from 10.1
allow 13 (Bq)
an answer of 12.5 (Bq) scores 2 marks</td><td>1
1</td><td>AO2</td></tr>
<tr><td>10.3</td><td>gamma radiation is weakly ionising / can pass out of the body to the detector
the half-life is short, so the activity falls quickly and the patient is not exposed for long
the half-life is long enough for the test to be completed</td><td>allow does not stay radioactive in the body for long</td><td>1
1
1</td><td>AO3</td></tr>
<tr><td>10.4</td><td>contamination is the unwanted presence of radioactive atoms on or in a material / person
irradiation is exposure to radiation from a source outside the object (the object does not become radioactive)</td><td></td><td>1
1</td><td>AO1</td></tr>
</table>

Question	Answers	Extra information	Mark	AO
11.1	a neutron is absorbed by a uranium-235 nucleus the nucleus becomes unstable and splits into two smaller nuclei releasing two or three neutrons and energy the neutrons released go on to cause further fission (chain reaction)	allow daughter nuclei allow gamma rays for energy	1 1 1 1	AO1
11.2	to absorb neutrons (to control the rate of fission)		1	AO1
11.3	two light nuclei join together to form a heavier nucleus some of the mass is converted into energy	allow energy is released	1 1	AO1

Total: 100 marks